SAMSUNG CONFIDENTIAL
THIS DOCUMENT CONTAINS CONFIDENTIAL
PROPRIETARY INFORMATION THAT IS
SAMSUNG ELECTRONICS CO'S PROPERTY.
DO NOT DISCLOSE TO OR DUPLICATE FOR OTHERS
EXCEPT AS AUTHORIZED BY SAMSUNG.

SM-A536E(A53 5G) REV05

Sheet01 : GSM / WCDMA / LTE / NR(N41) RF
Sheet02 : TRANSCEIVER, SUB ANT
Sheet03 : CONNECTIVITY(BT/WIFI/FM), NFC
Sheet04 : AP(S5E8825-INTERFACE,GPIO)
Sheet05 : AP(POWER), MEM(uMCP)
Sheet06 : PMIC(S2MPU13,S2MPU14), IF PMIC
Sheet07 : AUDIO AMP, SENSOR
Sheet08 : CAMERA
Sheet09 : DISPLAY PMIC, C2C

Engineer:
Drawn by:
R&D CHK:
DOC CTRL CHK:
MFG ENGR CHK:
QA CHK:
TITLE: A52
Size:
REV:
Drawing Number:
Page:
Changed by: user33
Date Changed:
Time Changed:

SAMSUNG CONFIDENTIAL
THIS DOCUMENT CONTAINS CONFIDENTIAL
AND PROPRIETARY INFORMATION OF
SAMSUNG ELECTRONICS CO. LTD. PROPERTY.
DO NOT DISCLOSE TO OR DUPLICATE FOR OTHERS
EXCEPT AS AUTHORIZED BY SAMSUNG.

MAIN ANT1

LMB TRX

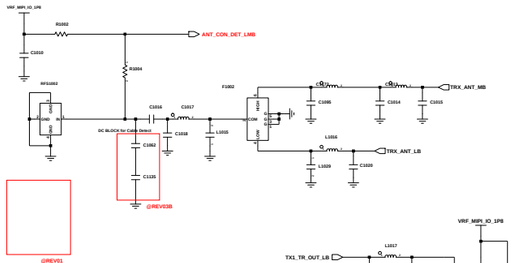

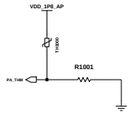

THERMISTER

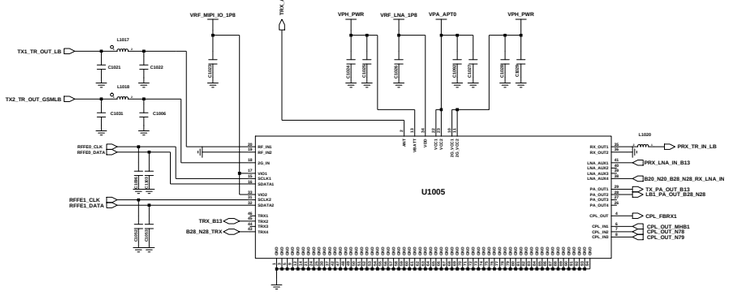

LB L-PAMiD

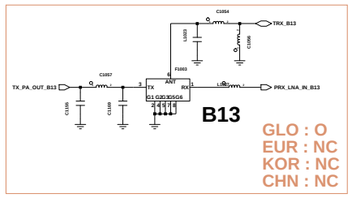

B13

GLO : O
EUR : NC
KOR : NC
CHN : NC

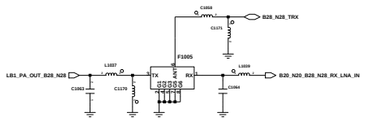

B28 / B20 RX

MAIN ANT2

HB TRX / UHB DRX

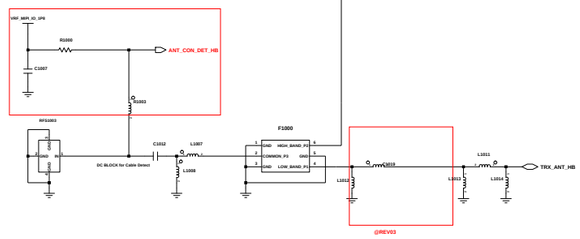

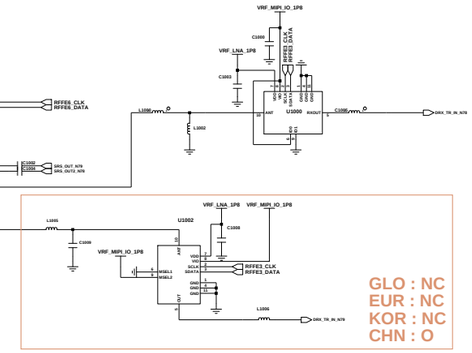

GLO : NC
EUR : NC
KOR : NC
CHN : O

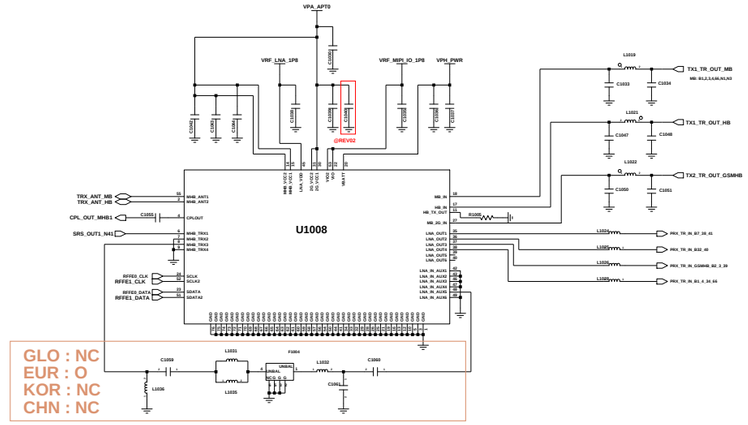

GLO : NC
EUR : O
KOR : NC
CHN : NC

MHB L-PAMiD

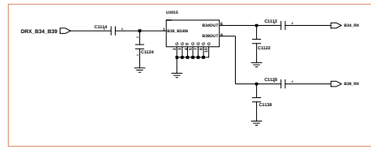

GLO : NC
EUR : NC
KOR : NC
CHN : O

B34 / B39 RX

SUB ANT1

LB DRX / B20 TRX FOR L-L ENDC
MHB PRX MIMO

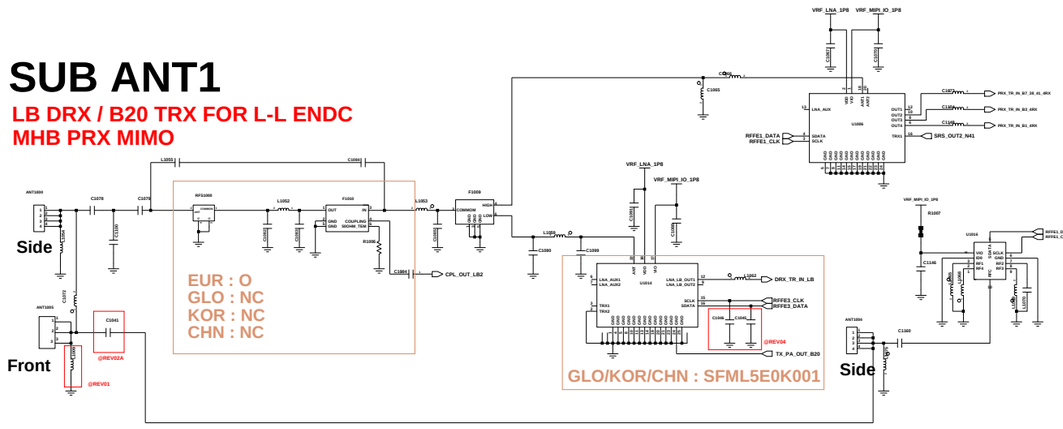

EUR : O
GLO : NC
KOR : NC
CHN : NC

GLO/KOR/CHN : SFML5E0K001

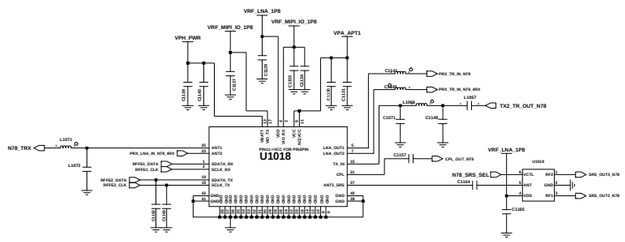

N78 L-PAMID

SUB ANT2

MHB DRX
MHB TRX FOR MM/MH ENDC
GPS, WIFI 2.4G

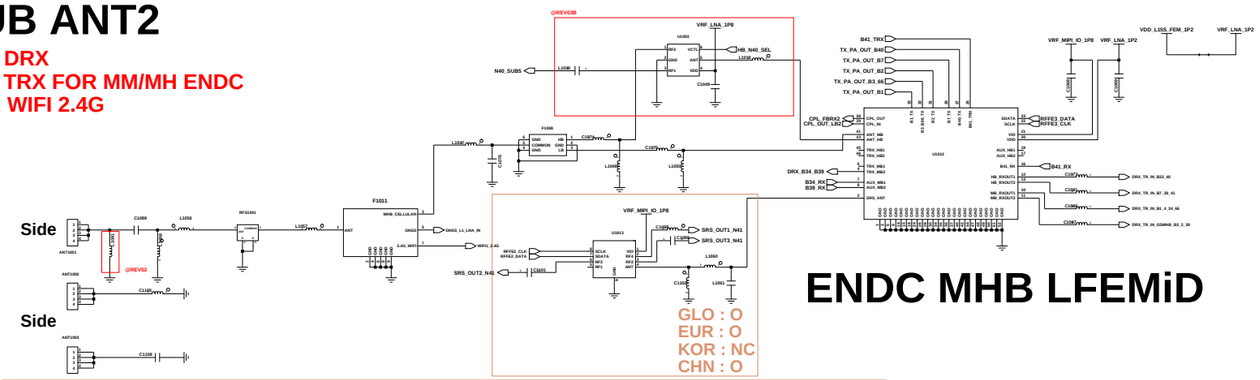

GLO : O
EUR : O
KOR : NC
CHN : O

ENDC MHB LFEMiD

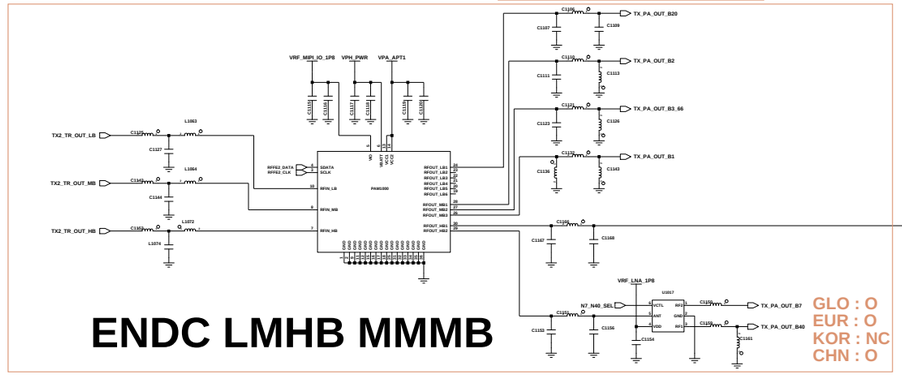

GLO : O
EUR : O
KOR : NC
CHN : O

ENDC LMHB MMMB

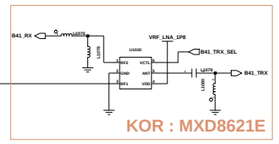

KOR : MXD8621E

Engineer:	A52 5G
Drawn by:	
R&D CHK:	RF PAM/FEM
DOC CTRL CHK:	
MFG DOCS CHK:	
Q/A CHK:	

Changed by: | Date Changed: | Time Changed: | REV | Drawing Number:

SAMSUNG CONFIDENTIAL
THIS DOCUMENT CONTAINS CONFIDENTIAL
AND PROPRIETARY INFORMATION OF
SAMSUNG ELECTRONICS CO. LTD. PROPERTY.
DO NOT DISCLOSE TO OR DUPLICATE FOR OTHERS
EXCEPT AS AUTHORIZED BY SAMSUNG.

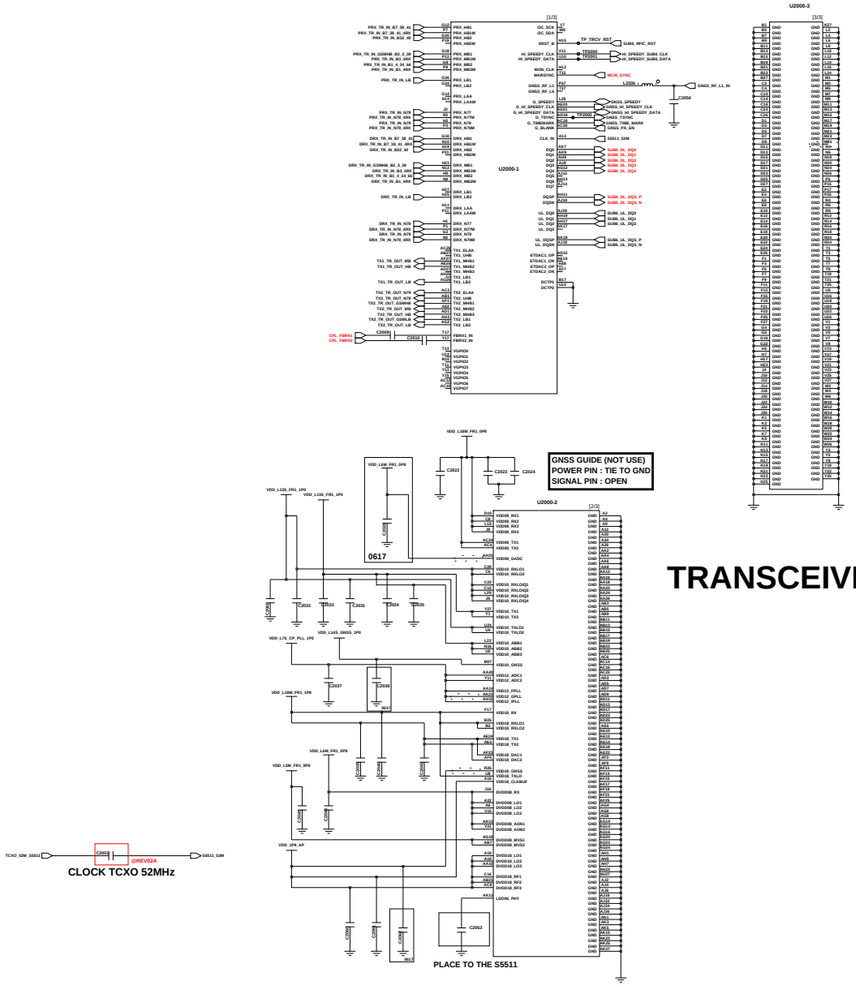

TRANSCEIVER (S5511)

SUB ANT3

N78/N79 TRX

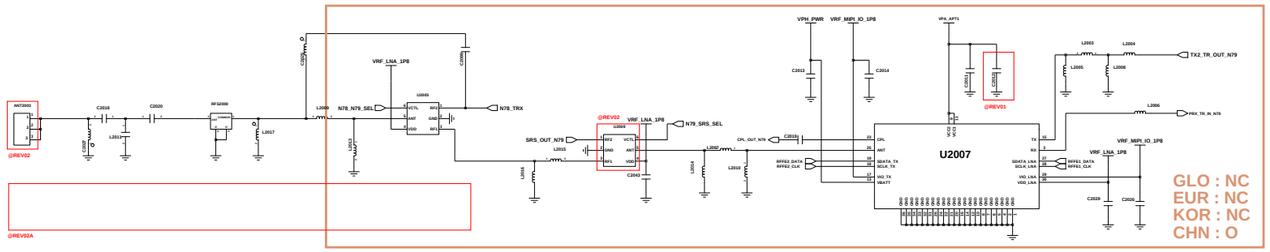

N79 L-PAMID

SUB ANT5

MHB DRX MIMO
N78 PRX MIMO

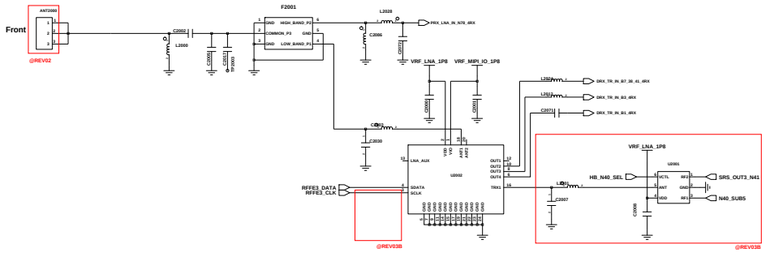

SUB ANT6

N79 PRX MIMO

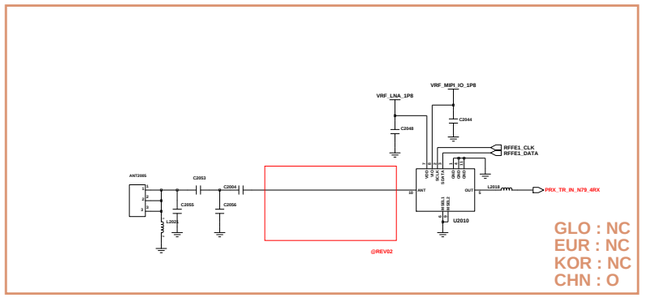

APT0

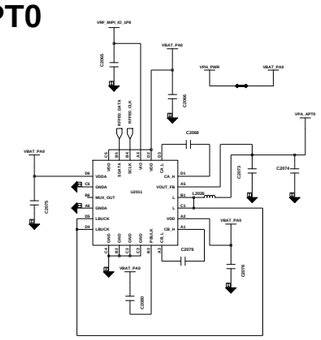

APT1

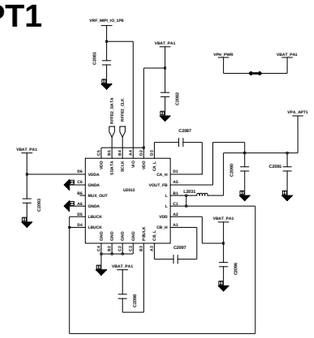

SUB ANT7

N79 DRX MIMO

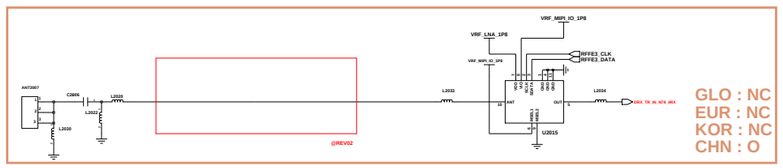

SUB ANT8

For NA

SUB ANT8

N78 DRX MIMO

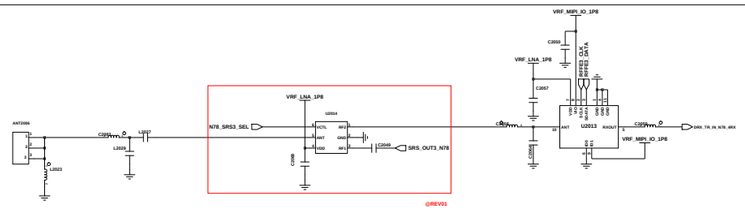

Engineer:	A52 5G
Dwing Ap:	TITLE: RF TRCV/PAM/APT
Appl Code:	
SQA Code Code:	
SPS Admin Code:	
Changed By:	Date Changed:
QA Code:	Drawing Number:

SAMSUNG CONFIDENTIAL
THIS DOCUMENT CONTAINS CONFIDENTIAL
PROPRIETARY INFORMATION THAT IS
SAMSUNG ELECTRONICS CO'S PROPERTY.
DO NOT DISCLOSE TO OR DUPLICATE FOR OTHERS
EXCEPT AS AUTHORIZED BY SAMSUNG.

WIFI/BT/FM

SUB ANT4

WIFI_5G

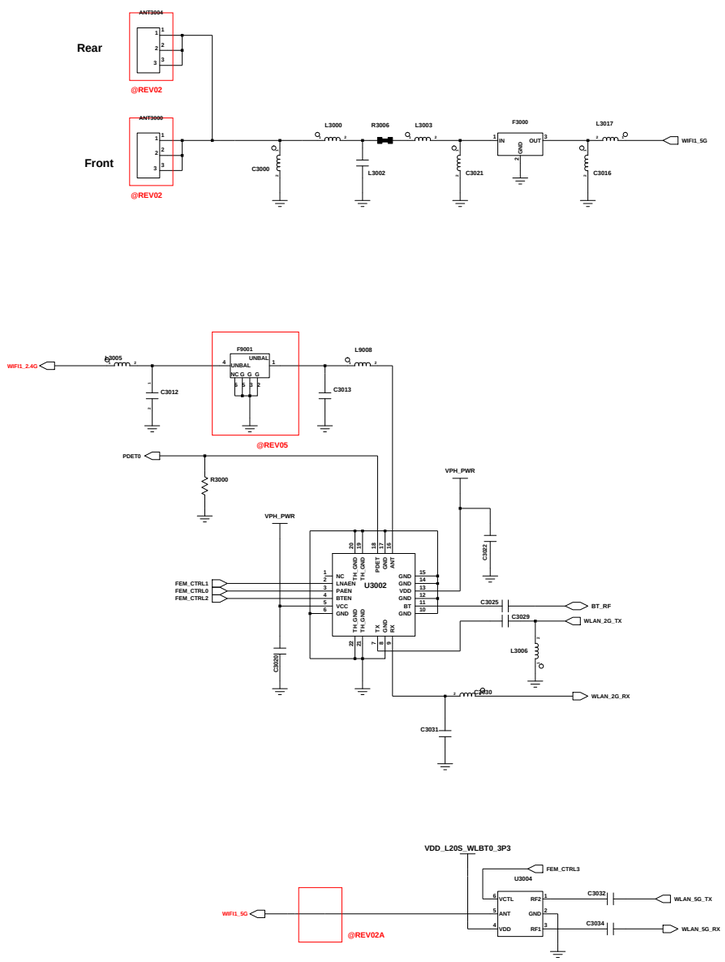

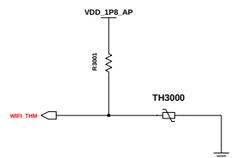

GPS L1 / GNSS/BEIDOU

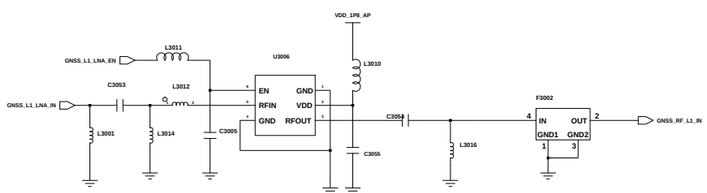

MST

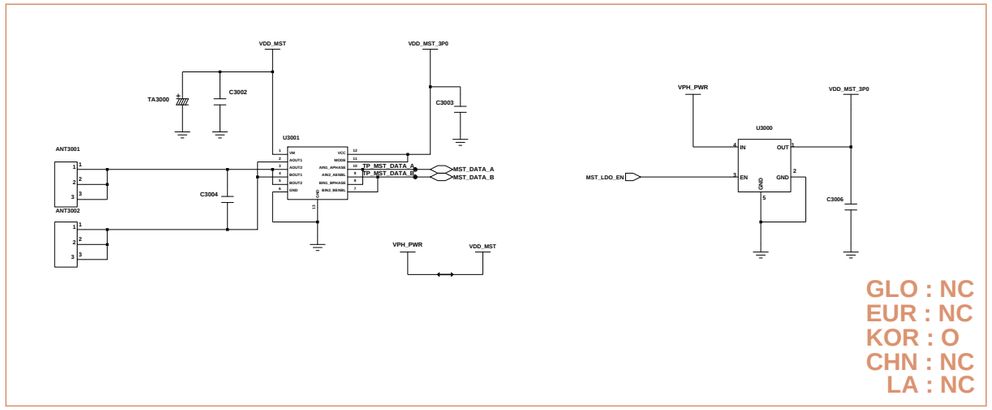

GND CCP

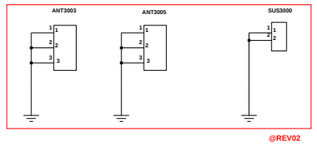

NFC

eSE : SN4V
UICC : RN4V

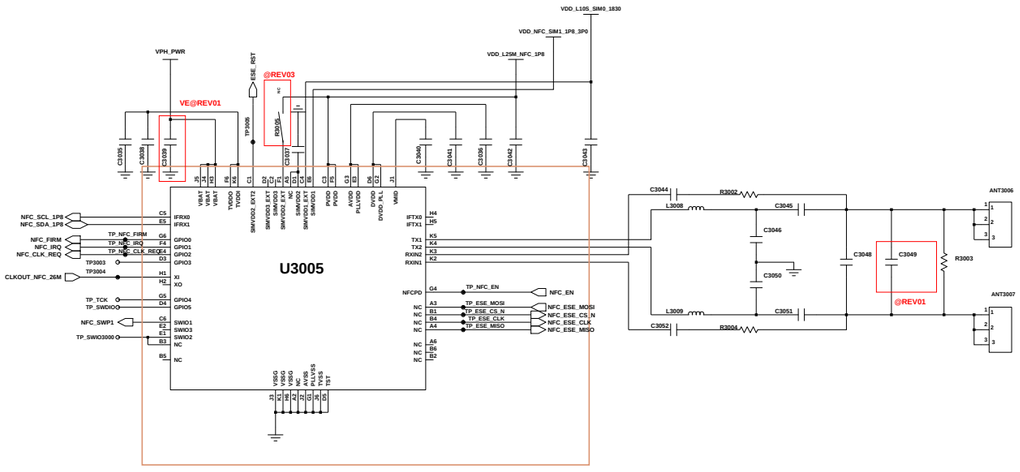

Engineer:	SM-A426B
Drawn by:	
R&D CHK:	TITLE: WIFI/NFC/MST/GPS
DOC CTRL CHK:	Size:
MFG ENGR CHK:	
Changed by: user118	Date Changed:
Time Changed:	QA CHK:
REV	Drawing Number:
Page: 3	

SAMSUNG CONFIDENTIAL
THIS DOCUMENT CONTAINS CONFIDENTIAL
AND PROPRIETARY INFORMATION OF
SAMSUNG ELECTRONICS CO'S PROPERTY.
DO NOT DISCLOSE TO OR DUPLICATE FOR OTHERS
EXCEPT AS AUTHORIZED BY SAMSUNG.

PAPAYA

UCP4000-1

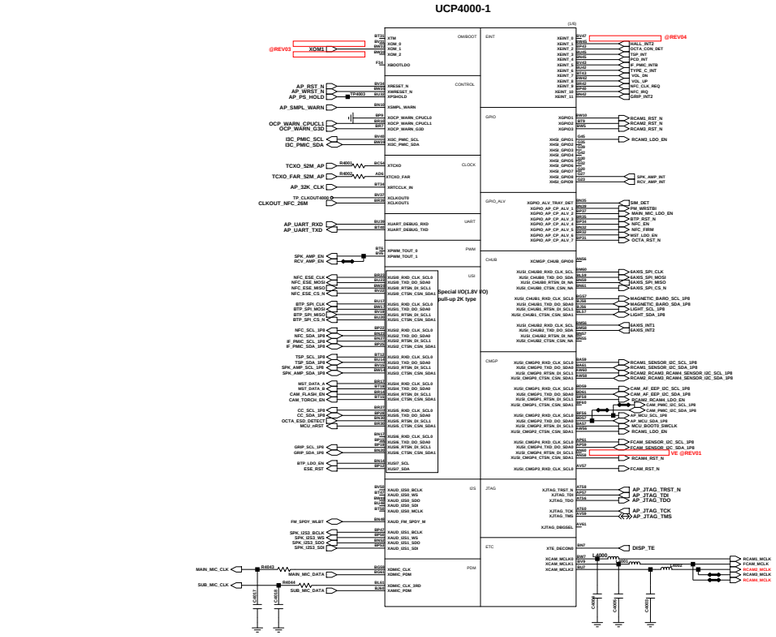

UCP4000-2

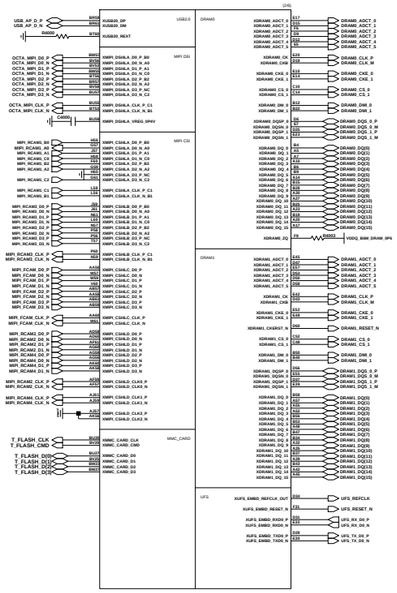

UCP4000-3

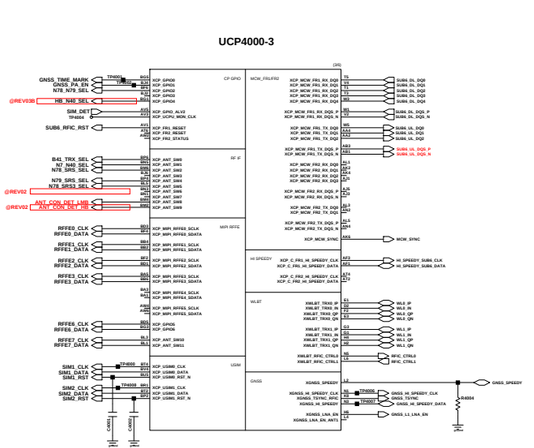

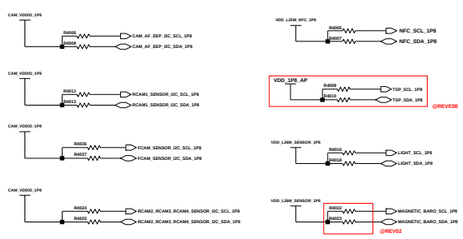

AP HW REV 7

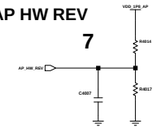

REV	R1(Kohm)	R2(Kohm)	AP
0	NC	0	BRING UP
1	430	30	REV00
2	390	62	
3	360	91	REV01
4	330	120	
5	300	150	REV02
6	270	180	REV03
7	240	220	REV03B, REV04, REV05
8	200	240	
9	180	270	
10	150	300	

PIN [3:1]	Function	
OM[2:0]	1st Boot	2nd Boot
000	UFS	USB
001	----	USB
010	USB	----
100	SD	USB

iROM BOOT

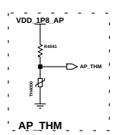

AP_THM

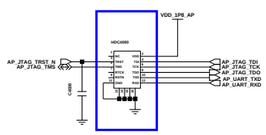

AP JTAG

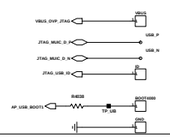

PCB JTAG

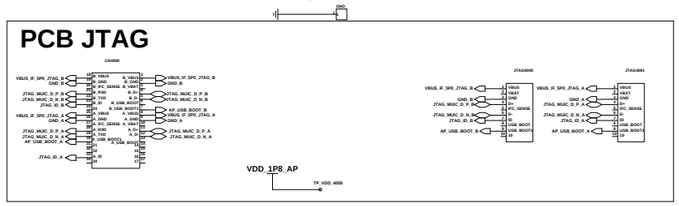

SYSTEM CLOCK

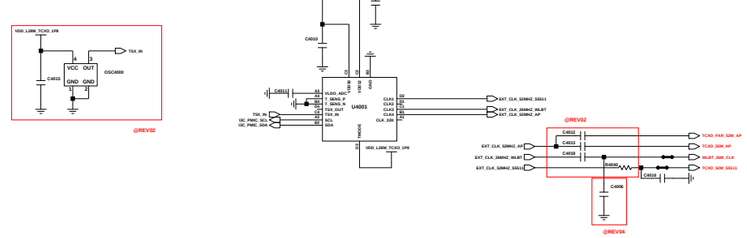

Engineer:	SAMSUNG ELECTRONICS
Checked by:	
Release by:	
ECO Link:	TITLE:
DOC CTRL Link:	2020_090906
MFG ENGR Link:	
QA Link:	SIZE: A4 / Drawing Number: / Page: 1

Changed by:	Date Changed:	Time Changed:
[illegible]	Monday, September 28, 2020	1:49:24 pm

SAMSUNG CONFIDENTIAL
THIS DOCUMENT CONTAINS CONFIDENTIAL PROPRIETARY INFORMATION THAT IS SAMSUNG ELECTRONICS CO'S PROPERTY. DO NOT DISCLOSE TO OR DUPLICATE FOR OTHERS EXCEPT AS AUTHORIZED BY SAMSUNG.

UCP4000-4

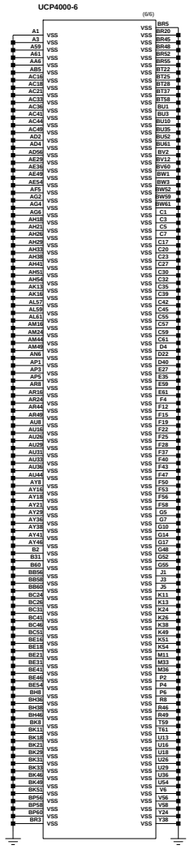

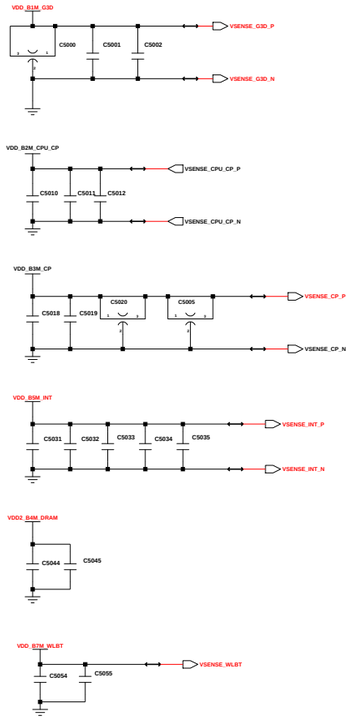

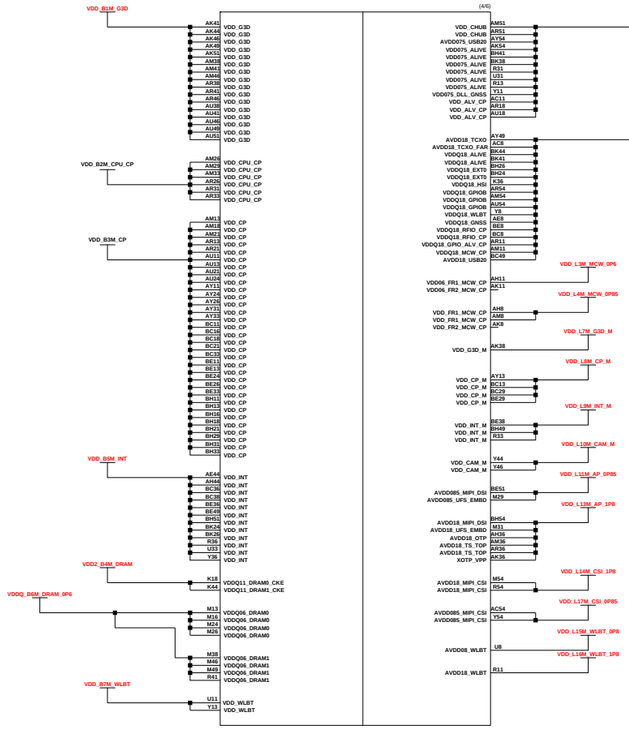

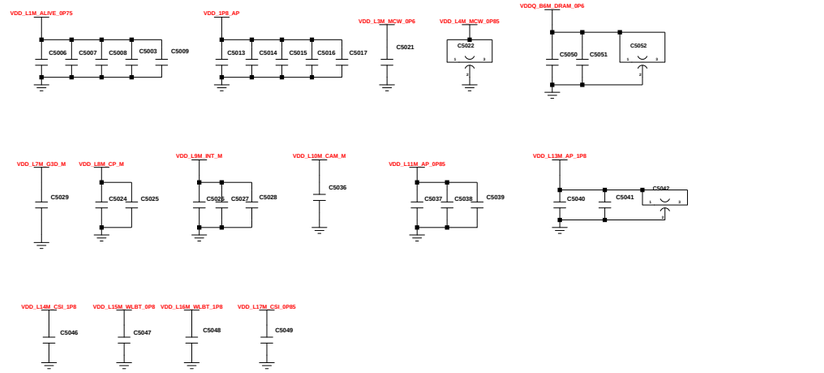

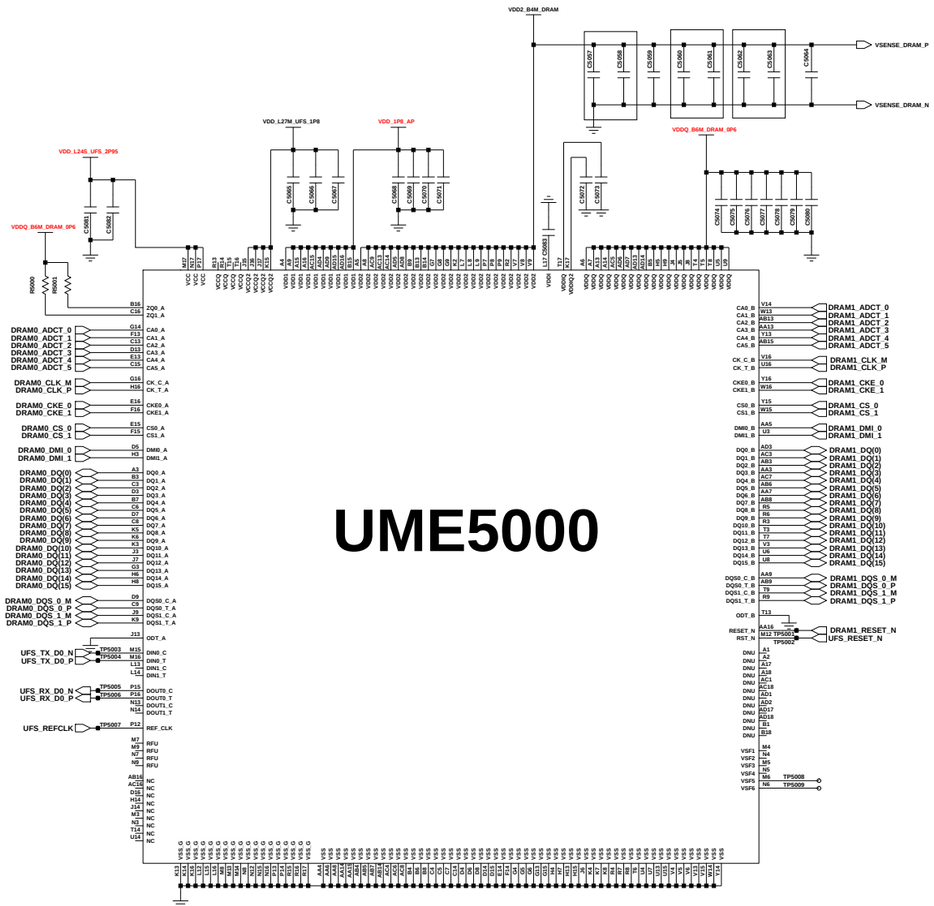

UCP4000-5

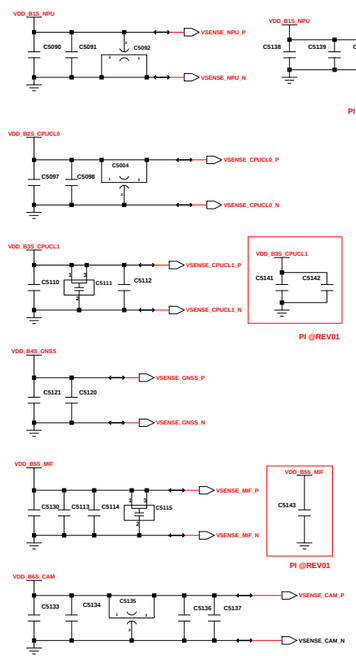

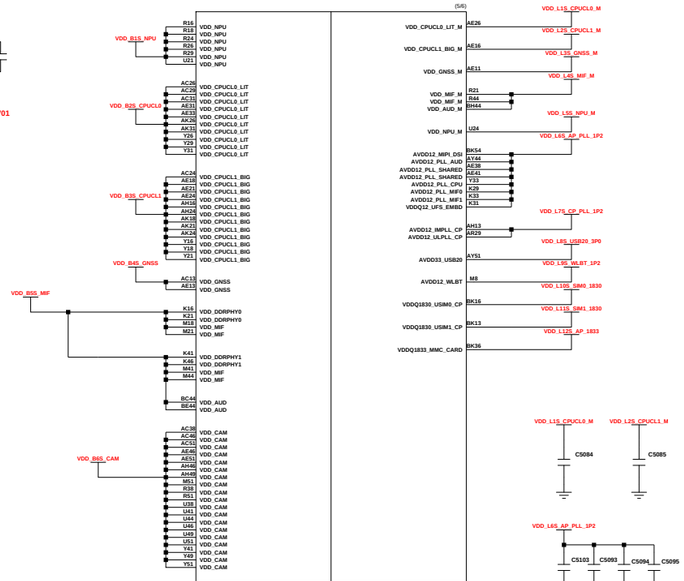

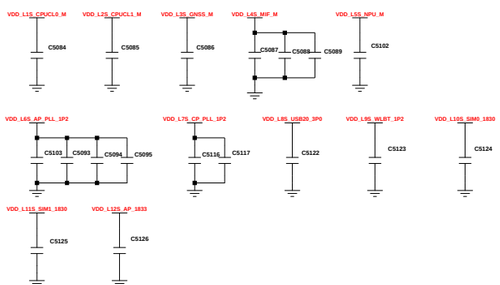

UME5000

6GB + 128GB uMCP : 1108-000714
8GB + 128GB uMCP : 1108-000721
8GB + 256GB uMCP : 1108-000722

6GB + 128GB uMCP

Engineer:		A42 mmW	
Drawn by:			
R&D CHK:		TITLE: AP/CP/uMCP	Size:
DOC CTRL CHK:			
MFG ENGR CHK:			
QA CHK:	Changed by: / Date Changed: / Time Changed:	REV / Drawing Number:	Page:

SAMSUNG CONFIDENTIAL
THIS DOCUMENT CONTAINS CONFIDENTIAL
AND PROPRIETARY INFORMATION OF
SAMSUNG ELECTRONICS CO'S PROPERTY.
DO NOT DISCLOSE TO OR DUPLICATE FOR OTHERS
EXCEPT AS AUTHORIZED BY SAMSUNG.

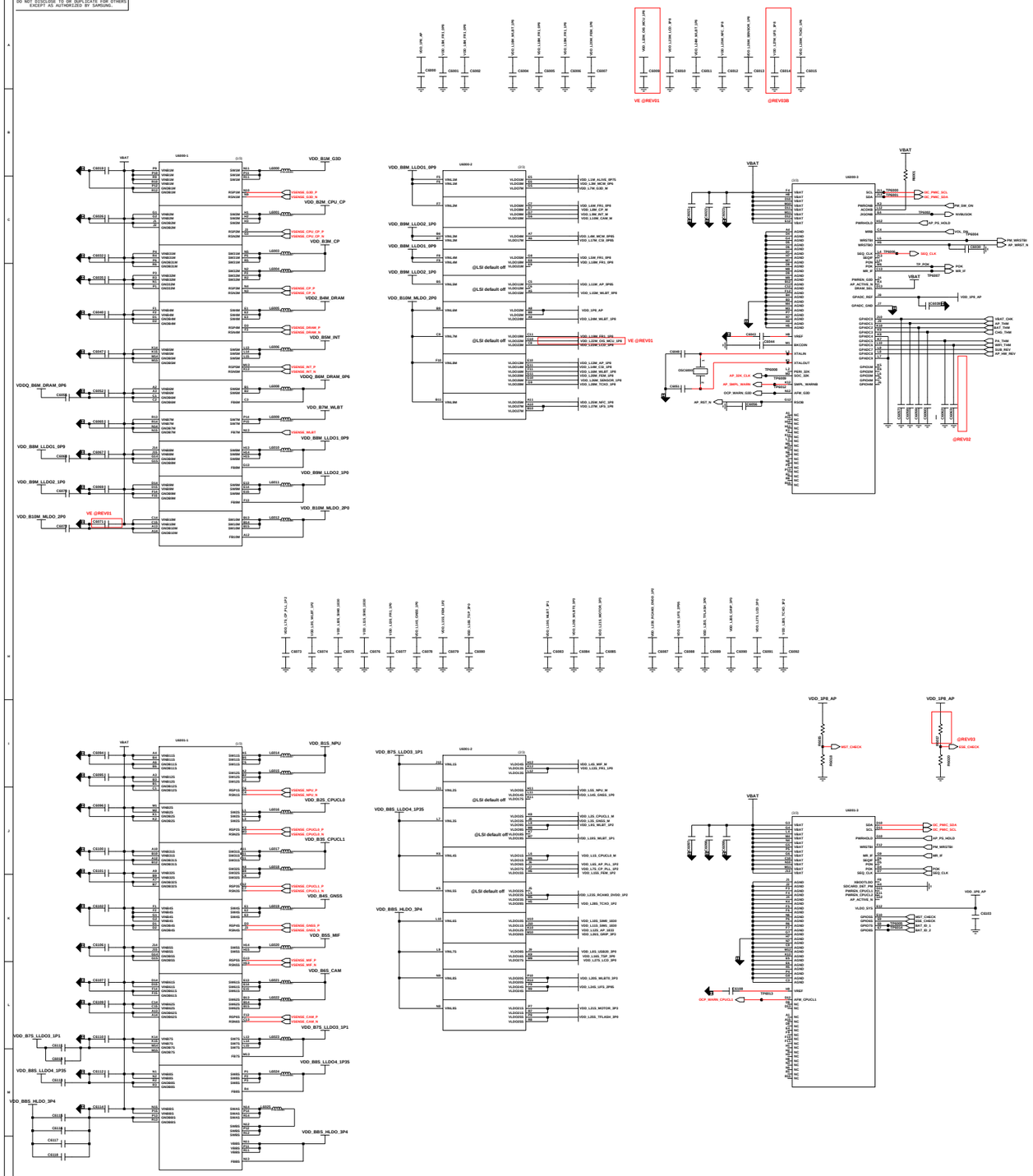

DIRECT CHARGER

IF PMIC

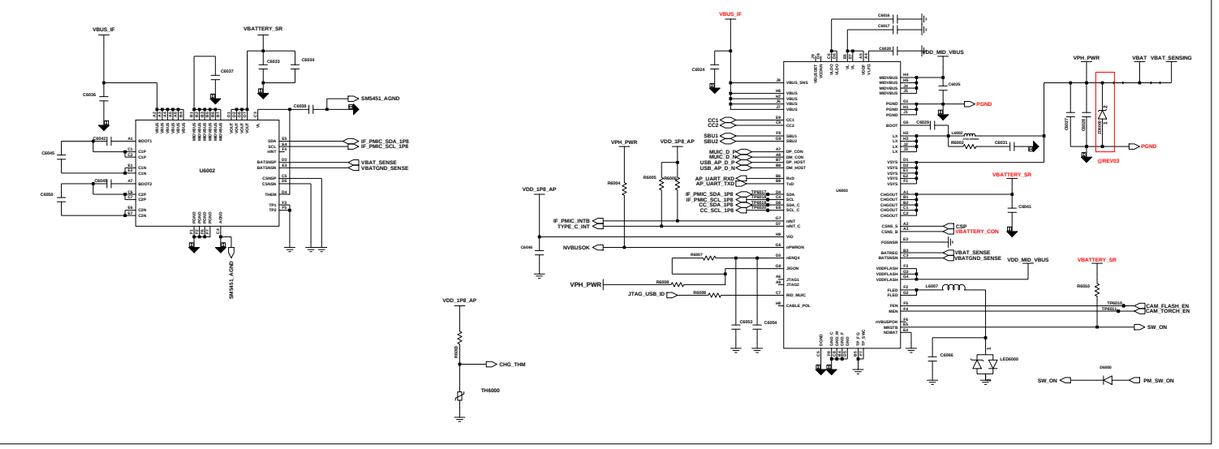

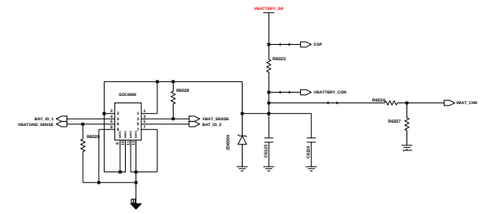

BATTERY CON

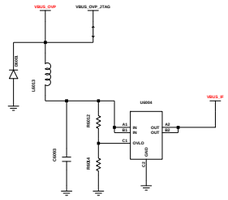

OVP

MOTOR

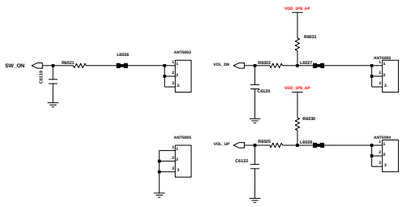

POWER & VOL KEY

Engineer:	A42 mmW
Drawn by:	
R&D CHK:	TITLE: POWER/MOT/KEY
DOC CTRL CHK:	Size
MFG SOUR CHK:	
QA CHK:	REV / Drawing Number

Changed by: | Date Changed: | Time Changed:

SAMSUNG CONFIDENTIAL
THIS DOCUMENT CONTAINS CONFIDENTIAL PROPRIETARY INFORMATION THAT IS SAMSUNG ELECTRONICS CO'S PROPERTY. DO NOT DISCLOSE TO OR DUPLICATE FOR OTHERS EXCEPT AS AUTHORIZED BY SAMSUNG.

AUDIO & SENSOR PART

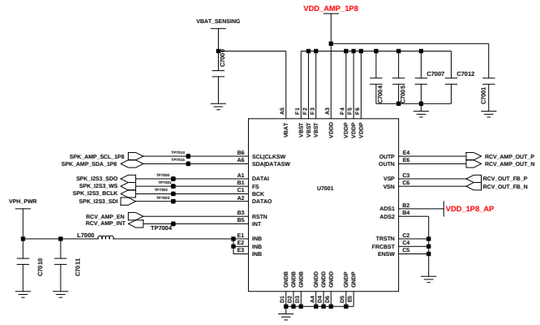

RCV AMP

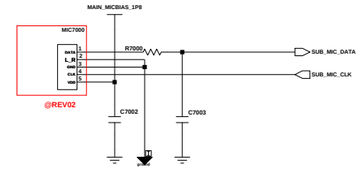

2nd MIC

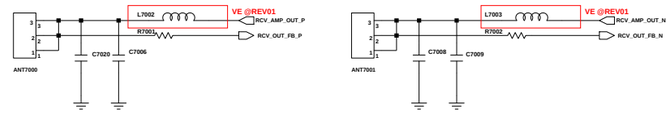

RCV CONTACT

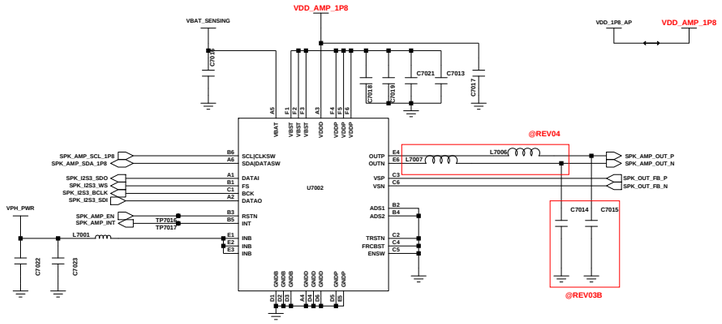

SPK AMP

SENSOR

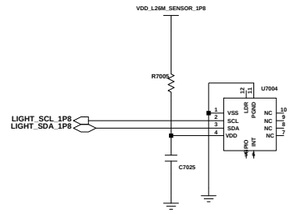

AMBIENT SENSOR

HALL IC

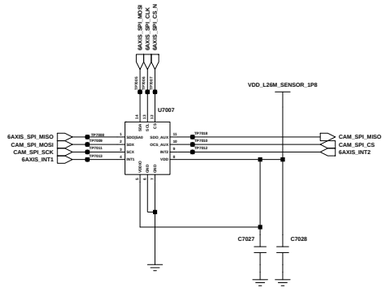

ACC&GYRO SENSOR

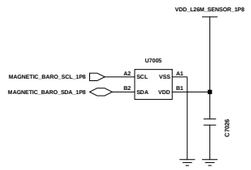

MAGNETIC SENSOR

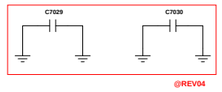

A536U ONLY

Engineer:			
Drawn by:			
R&D CHK:	TITLE:		Size:
DOC CTRL CHK:	A52_LTE_REV00		
MFG ENGR CHK:			

Changed by:	Date Changed:	Time Changed:	QA CHK:	REV:	Drawing Number:	Page:

SAMSUNG CONFIDENTIAL
THIS DOCUMENT CONTAINS CONFIDENTIAL PROPRIETARY INFORMATION THAT IS SAMSUNG ELECTRONICS CO'S PROPERTY. DO NOT DISCLOSE TO OR DUPLICATE FOR OTHERS EXCEPT AS AUTHORIZED BY SAMSUNG.

CAMERA

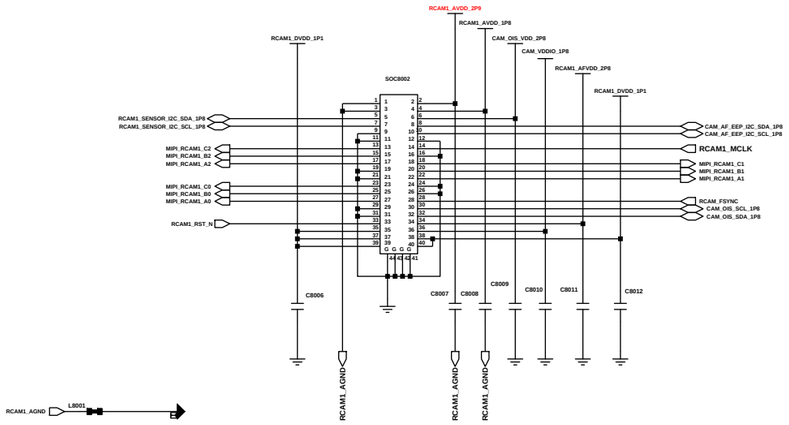

RCAM1_64M OIS(40PIN)

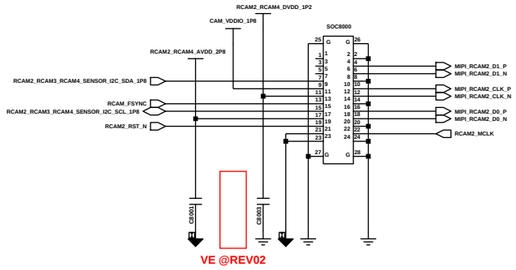

RCAM2_5M_BOKEH_CAMERA(24PIN)

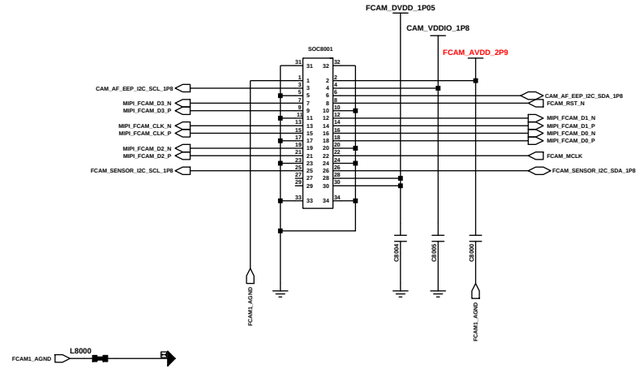

FRONT_32M CAMERA (30PIN)

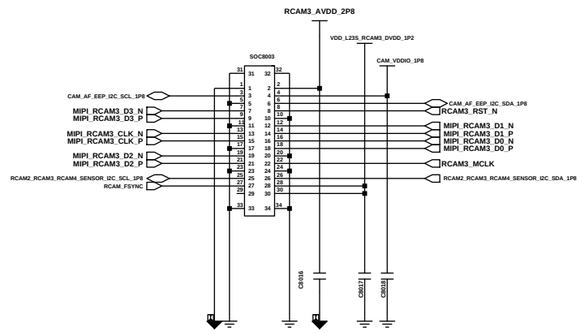

RCAM3_SUPER WIDE_12M CAMERA(30pin)

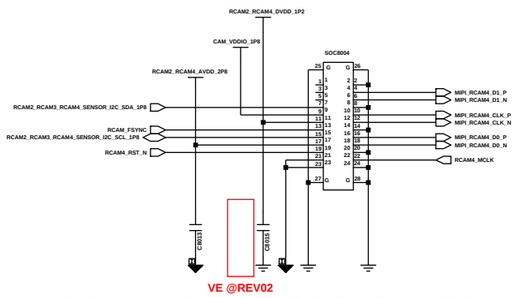

RCAM4_5M_MACRO_CAMERA(24PIN)

CAM PMIC

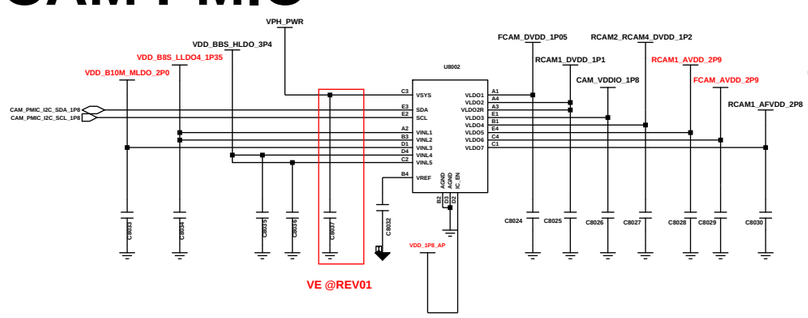

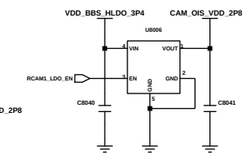

RCAM1_OIS_VDD

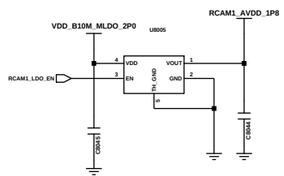

RCAM1_AVDD

VE @REV01

CAM MCU_DVDD

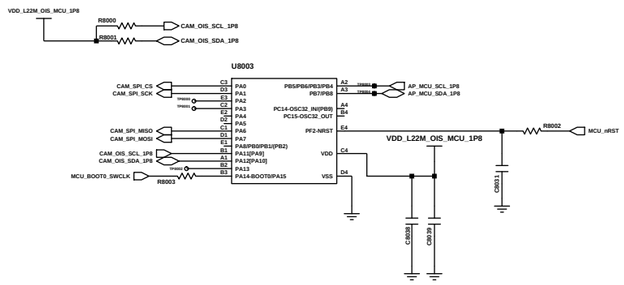

CAM MCU

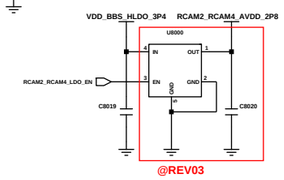

@REV03

RCAM2_RCAM4_AVDD

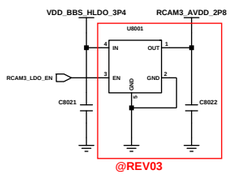

@REV03

RCAM3_AVDD

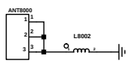

Engineer:		SM-A426B	
Drawn by:			
R&D CHK:		TITLE: CAMERA	Size:
DOC CTRL CHK:			
MFG ENGR CHK:			
Changed by:	Date Changed:	Time Changed:	QA CHK:
REV	Drawing Number:	Page: 7/8	

SAMSUNG CONFIDENTIAL
THIS DOCUMENT CONTAINS CONFIDENTIAL PROPRIETARY INFORMATION THAT IS SAMSUNG ELECTRONICS CO'S PROPERTY. DO NOT DISCLOSE TO OR DUPLICATE FOR OTHERS EXCEPT AS AUTHORIZED BY SAMSUNG.

C2C (Conn to Conn FPCB)

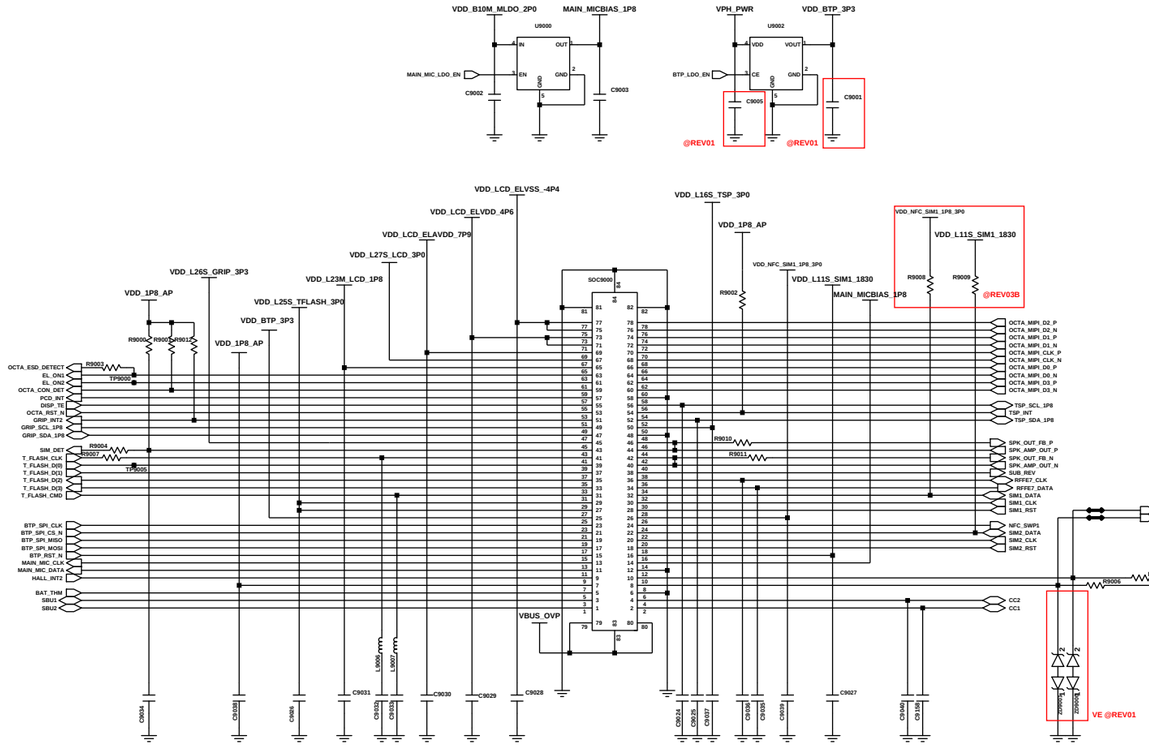

DISPLAY

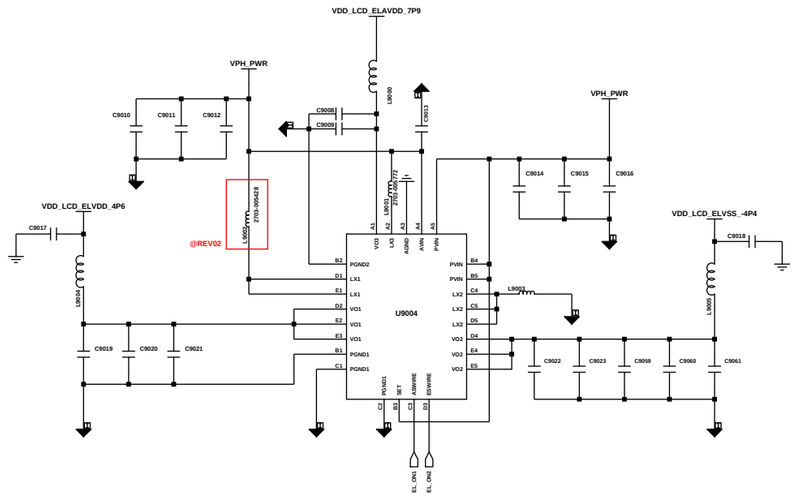

DISPLAY PMIC

SHIELD CAN/BOTH HOLE

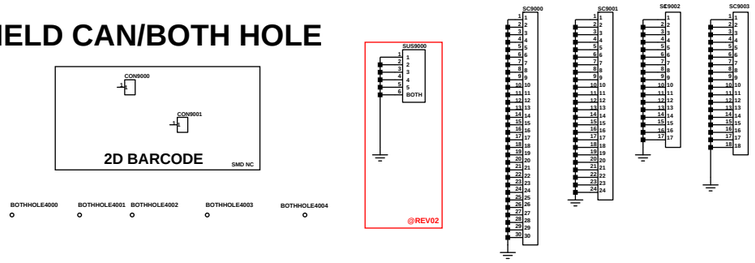

REGION		MEMORY		
R9013 NC	EUR	R9017	6/128	
R9014	GLOBAL	R9018 NC	8/128	
R9015 NC	KOR	R9019 NC	8/256	
R9016 NC	CHN/HK/TW			

Engineer:		SAMSUNG ELECTRONICS	
Drawn by:			
R&D CHK:		TITLE: SM-A716U	Size:
DOC CTRL CHK:			
MFG ENGR CHK:			
Changed by: user20	Date Changed: Thursday, June 18, 2015	Time Changed: 10:18:28 am	QA CHK:
REV	Drawing Number:	Page: 1	

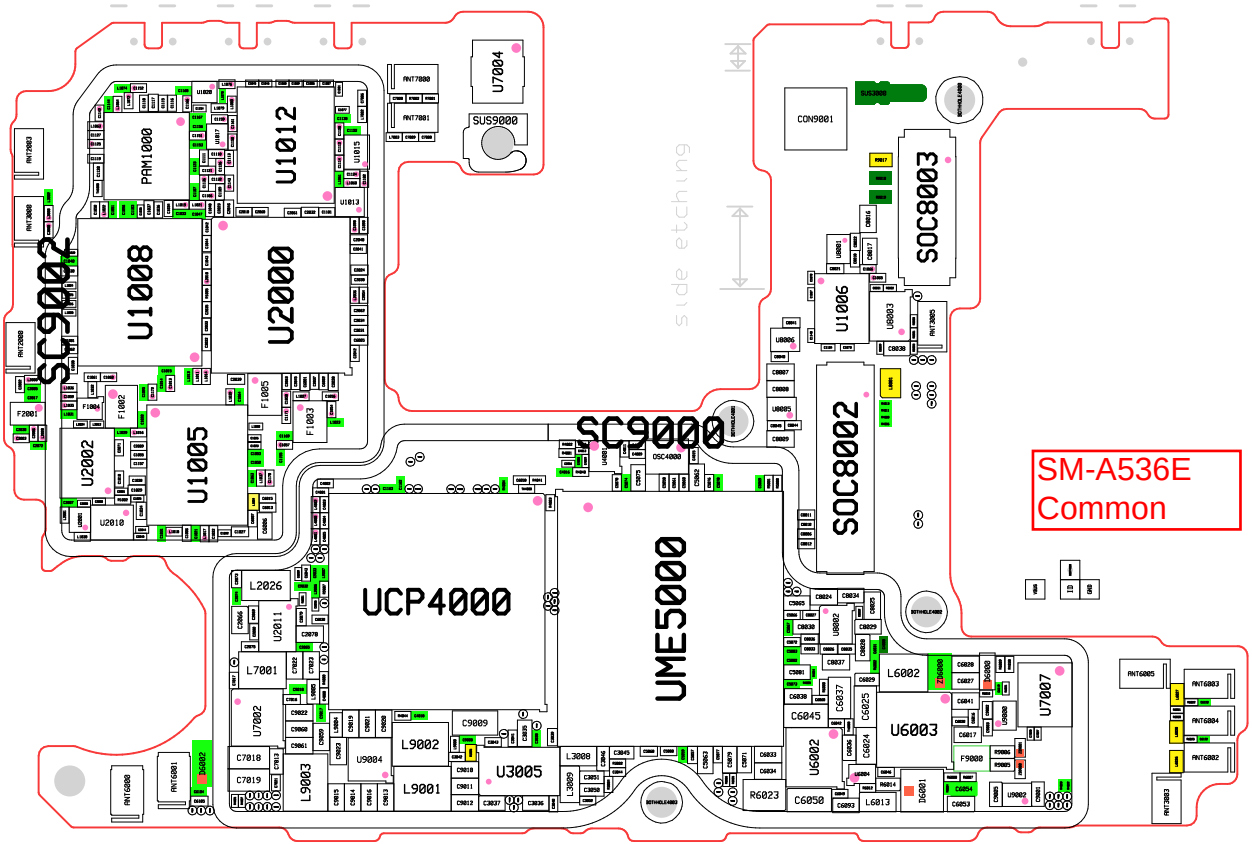
SC9002
U1008
U2000
PAM1000
U1012
U1005
U2002
U2010
F1002
F1004
F1005
F1003
F2001
U7004
SUS9000
ANT7000
ANT7001
ANT7003
ANT7008
ANT7009
side etching
CON9001
SOC8003
SOC8002
U1006
U8003
U8006
U8005
SC9000
OSC4000
UCP4000
UME5000
L2026
U2011
L7001
U7002
C7018
C7019
L9003
U9004
L9002
L9001
C9009
U3005
L3008
L3009
R6023
C6050
C6045
U6002
L6013
L6002
U6003
U7007
F9000
U9002
D6001
ANT6005
ANT6003
ANT6004
ANT6002
ANT6006
ANT6001
D6002
SM-A536E
Common

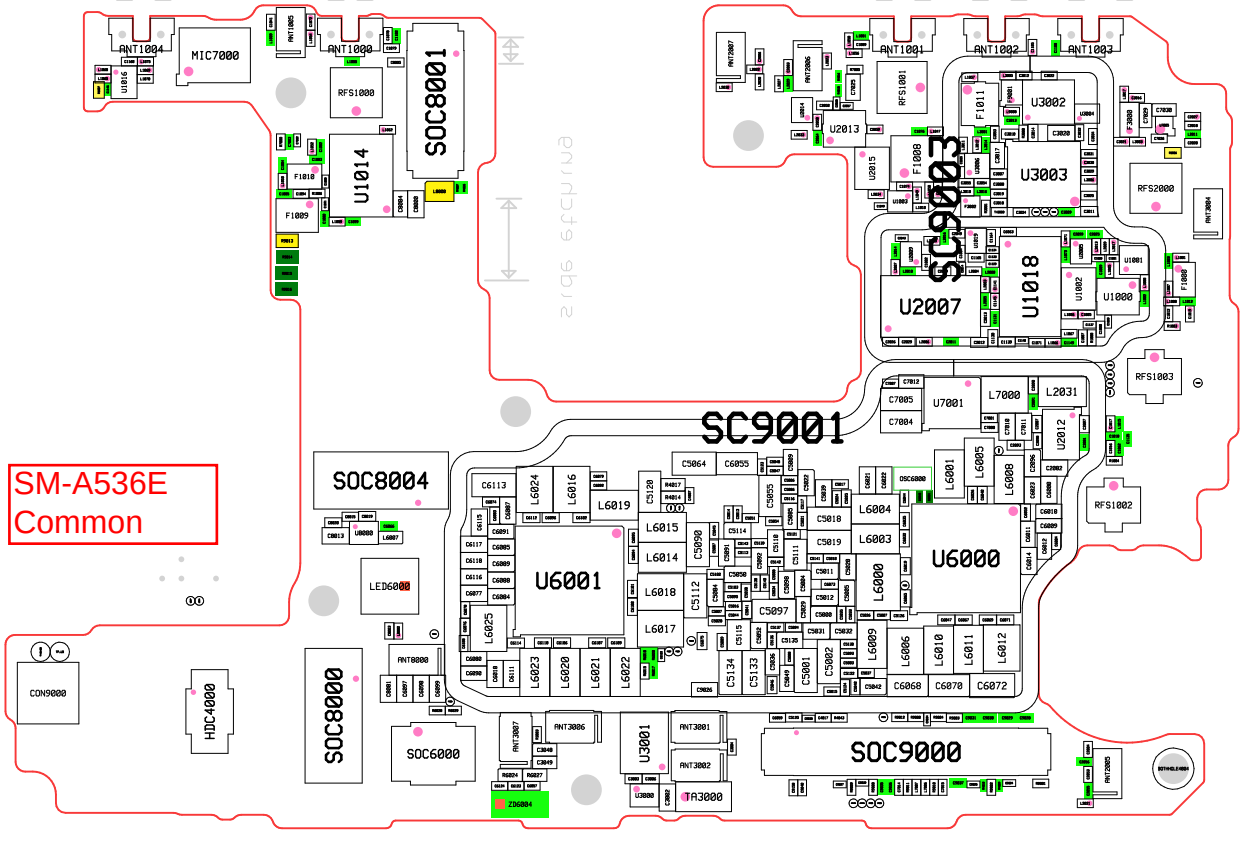
SM-A536E
Common
SC9001
SC9003
SOC8001
SOC8004
SOC8000
SOC6000
SOC9000
U6001
U6000
U1018
U2007
U3002
U3003
U1014
U3001
U7001
U1000
U1002
U1016
U2013
U2015
U2012
U8000
U0000
MIC7000
ANT1004
ANT1000
ANT1001
ANT1002
ANT1003
ANT1005
ANT2007
ANT2006
ANT3007
ANT3006
ANT3001
ANT3002
ANT3005
ANT3004
ANT8000
RFS1000
RFS1001
RFS2000
RFS1003
RFS1002
F1018
F1009
F1008
F1011
F1007
LED6000
CON9000
HDC4000
TA3000
ZD6004
L6024
L6016
L6019
L6015
L6014
L6018
L6017
L6025
L6023
L6020
L6021
L6022
L6001
L6005
L6008
L6004
L6003
L6000
L6009
L6006
L6010
L6011
L6012
L2031
C5064
C6055
C5120
C5030
C5112
C5097
C5134
C5133
C5002
C5001
C6068
C6070
C6072
C6113
C6117
C6118
C6116
C6077
C6091
C6085
C6089
C6080
C6084
C6088
C6090
C6087
C6086
C6082
C6083
C6081
C6079
C6078
C6075
C6074
C6073
C6071
C6069
C6067
C6066
C6065
C6064
C6063
C6062
C6061
C6060
C6059
C6058
C6057
C6056
C6054
C6053
C6052
C6051
C6050
C6049
C6048
C6047
C6046
C6045
C6044
C6043
C6042
C6041
C6040
C6039
C6038
C6037
C6036
C6035
C6034
C6033
C6032
C6031
C6030
C6029
C6028
C6027
C6026
C6025
C6024
C6023
C6022
C6021
C6020
C6019
C6018
C6017
C6016
C6015

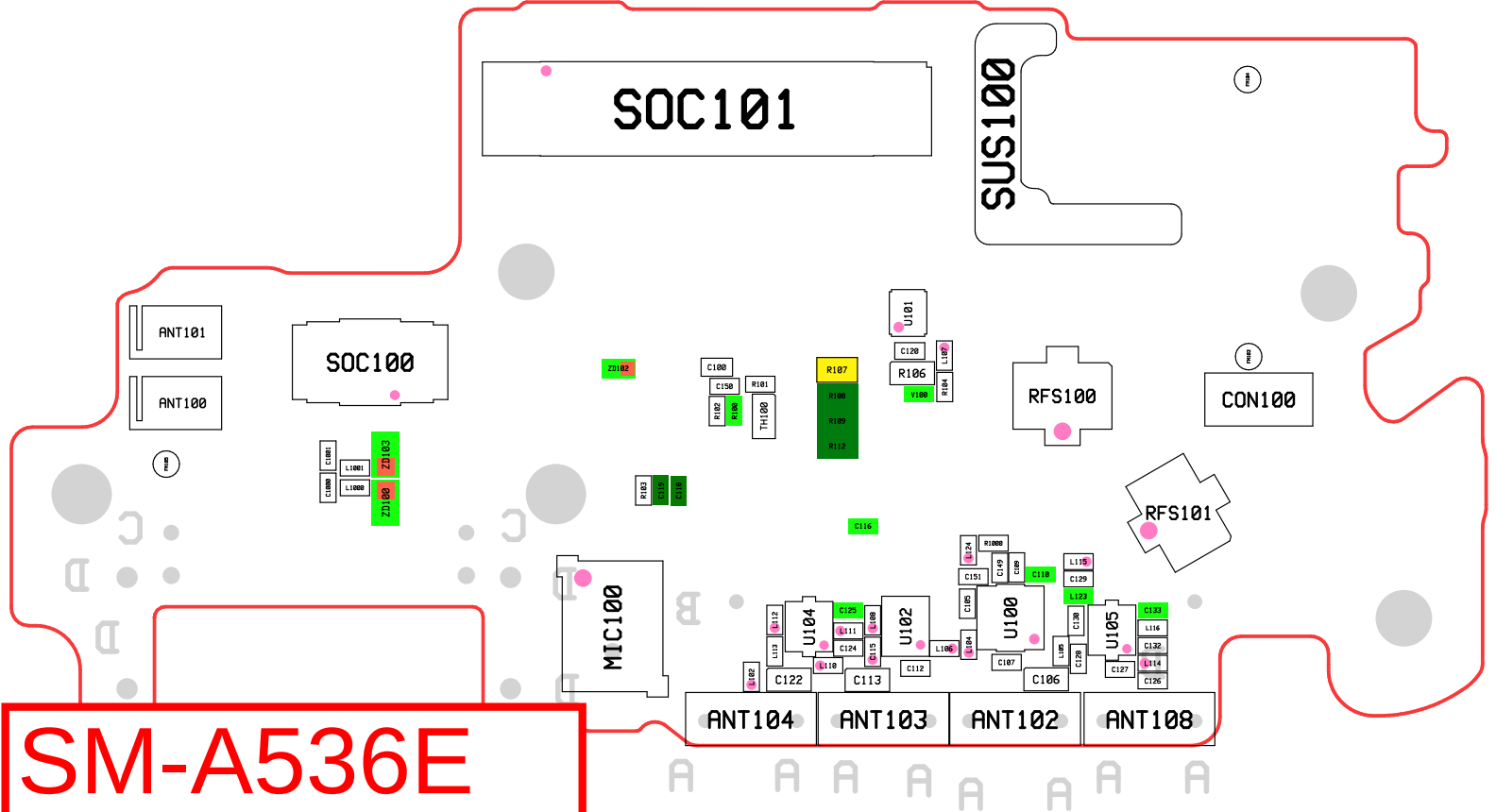
SOC101
SUS100
ANT101
ANT100
SOC100
RFS100
CON100
RFS101
MIC100
U101
U104
U102
U100
U105
ANT104
ANT103
ANT102
ANT108
SM-A536E

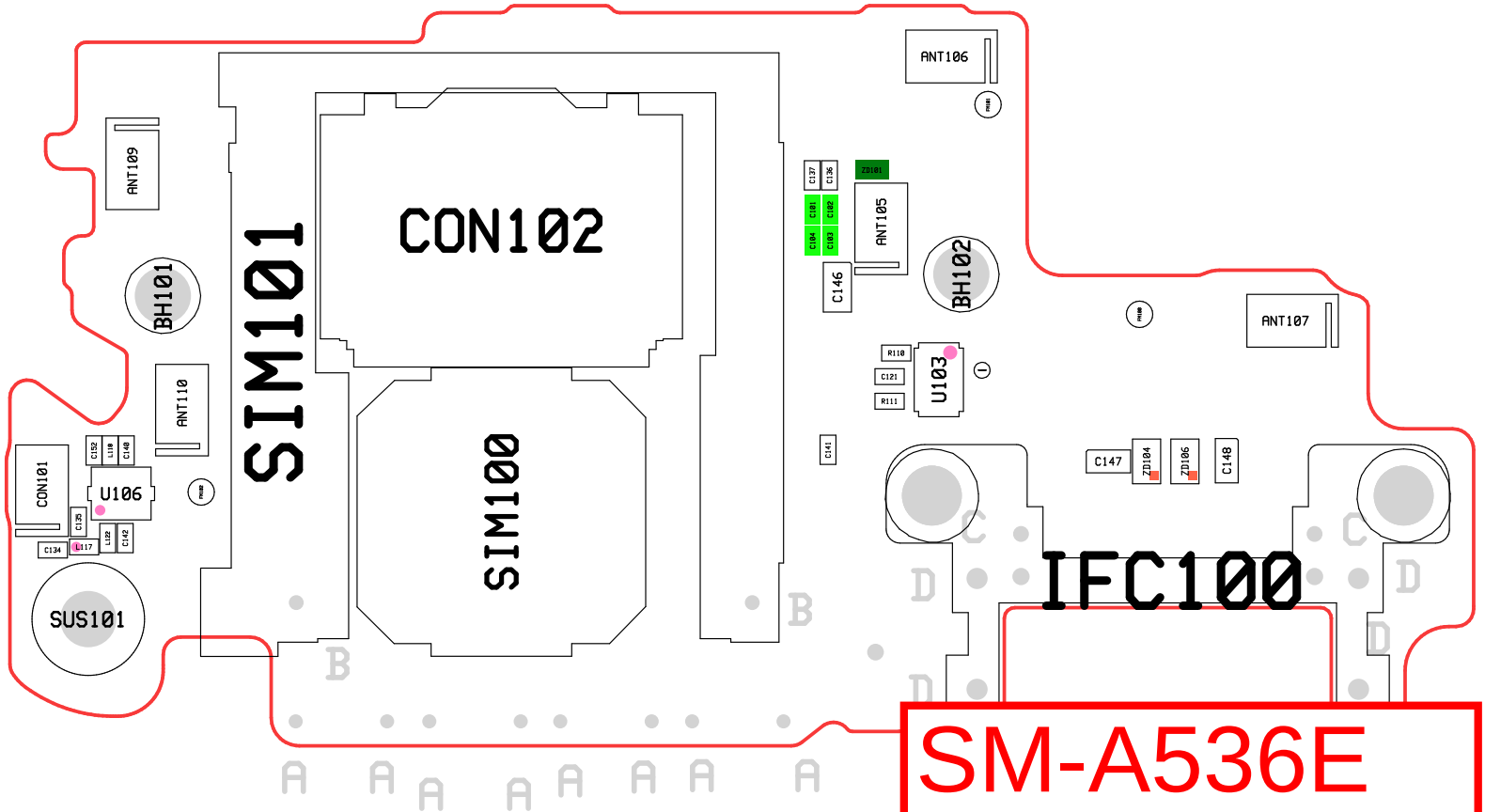
ANT106
ANT109
CON102
SIM101
BH101
ZD101
C137
C136
C101
C102
C104
C103
ANT105
C146
BH102
ANT107
R110
C121
R111
U103
ANT110
C141
C147
ZD104
ZD106
C148
C132
L118
C140
CON101
U106
C135
C134
L117
L122
C142
SIM100
IFC100
SUS101
SM-A536E